835 DIRECT CONNECT MODEM FIELD SERVICE MANUAL

ATARI®

A Warner Communications Company

FD100268
Rev. 01
March, 1983

COPYRIGHT © 1983 BY ATARI, INC. ALL RIGHTS RESERVED.

No part of this publication may be reproduced by any mechanical, photographic, or electronic process, or in the form of a phonographic recording, nor may it be stored in a retrieval system, transmitted, or otherwise copied for public or private use, without permission from the publisher.

Published By:
ATARI, INC.
1265 Borregas Avenue
P.O. Box 427
Sunnyvale, California 94086

835 Direct Connect Modem
Field Service Manual

835™ DIRECT CONNECT MODEM

FIELD SERVICE MANUAL

Atari believes that the information described in this manual is accurate and reliable, and much care has been taken in its preparation. However, no responsibility, financial or otherwise, shall be accepted for any consequences arising out of the use of this material. Information contained herein is subject to change. Revisions may be issued to advise of such changes and/or additions.

Correspondence regarding this document should be forwarded to Director of Technical Support, Consumer Product Service, Atari Incorporated, 845 West Maude Avenue, Sunnyvale, CA 94086.

TABLE OF CONTENTS

Section	Title	Page
	INTRODUCTION	v
1	THEORY OF OPERATION	1-1
	Introduction	1-1
	Overview	1-1
	Serial I/O Interface	1-2
	835 Controller Chip	1-2
	Functions of the Controller Chip	1-2
	On Hook/Off Hook	1-2
	Dial Digit	1-2
	Originate/Answer Mode	1-2
	Send Data	1-3
	Receive Data	1-3
	Present Status	1-3
	Analog Loopback	1-3
	Audio Off/On	1-3
	Other Functions	1-3
	Modem Chip	1-4
	Transmit	1-4
	Receive	1-4
	Analog Loopback	1-4
	Line Interface	1-5
	Power Supply	1-5
2	SILKSCREEN AND SCHEMATICS	2-1
3	TEST PROCEDURES	3-1
	Equipment Required	3-1
	Power-Up Sequence	3-1
	Test Sequence	3-1
4	DIAGNOSTIC FLOWCHART	4-1
5	PARTS LIST	5-1
6	SERVICE BULLETINS	6-1

LIST OF ILLUSTRATIONS

Section	Title	Page
1	835 Direct Connect Modem Block Diagram	1-1

INTRODUCTION

The ATARI 835™ Direct Connect Modem Field Service Manual is organized in six sections:

- THEORY OF OPERATION - Overview of how the electrical theory of the modem operates.
- SILKSCREEN AND SCHEMATIC - Electrical drawings of the printed circuit board and layout.
- TESTING AND TROUBLESHOOTING - Procedures for testing the unit.
- 835 FLOWCHART - Block diagram of the procedures for testing, troubleshooting, and repairing a defective 835 unit.
- PARTS LIST - List of parts available from ATARI for repairing and maintaining the 835 unit.
- SERVICE BULLETINS - Section to be used to hold service bulletins released by the Director of Technical Support. These bulletins will include changes in recommended repair procedures and required modifications for units in the field.

IMPORTANT: In order to test the unit completely, the customer must return the following items to the Service Center: 835 Direct Connect Modem, 835 power adaptor, and Telelink II™ Cartridge.

SECTION ONE

THEORY OF OPERATION

INTRODUCTION

The 835™ Direct Connect Modem (DCM) is designed for use with the Bell 103 Telephone System. It operates at a transfer rate of 300 Baud. Features include, Automatic Pulse Dialing, Software controlled Originate/Answer Mode Switching, and Audio Monitoring of the telephone line. The 835 allows for transfer of data over the telephone line directly (bypassing the telephone handset).

WARNING: Do not hook the 835 DCM to Bell Telephone's "Horizon® System". Doing so damages the telephone system. "Horizon" is a 4-wire, non-standard configuration that accepts only touch-tone pulsing.

OVERVIEW

The 835 DCM connects to the 400/800 Computer through the Serial I/O Bus and is compatible with the 1200XL Computer. A separate 22 volt AC adaptor furnishes the power for the 835 DCM. The two major ICs used in the 835 DCM are an 8048 microprocessor and a Texas Instruments Modem IC.

The 835 DCM consists of the following functional units (see Figure 1-1):

- Serial I/O Interface
- 835 Controller (8048)
- Texas Instruments Modem Chip (TI99532)
- Telephone Line Interface
- Power Supply

All components referenced in the following detailed description of the 835 DCM functional units can be found on Page 1 of the oversize drawing package included with this manual.

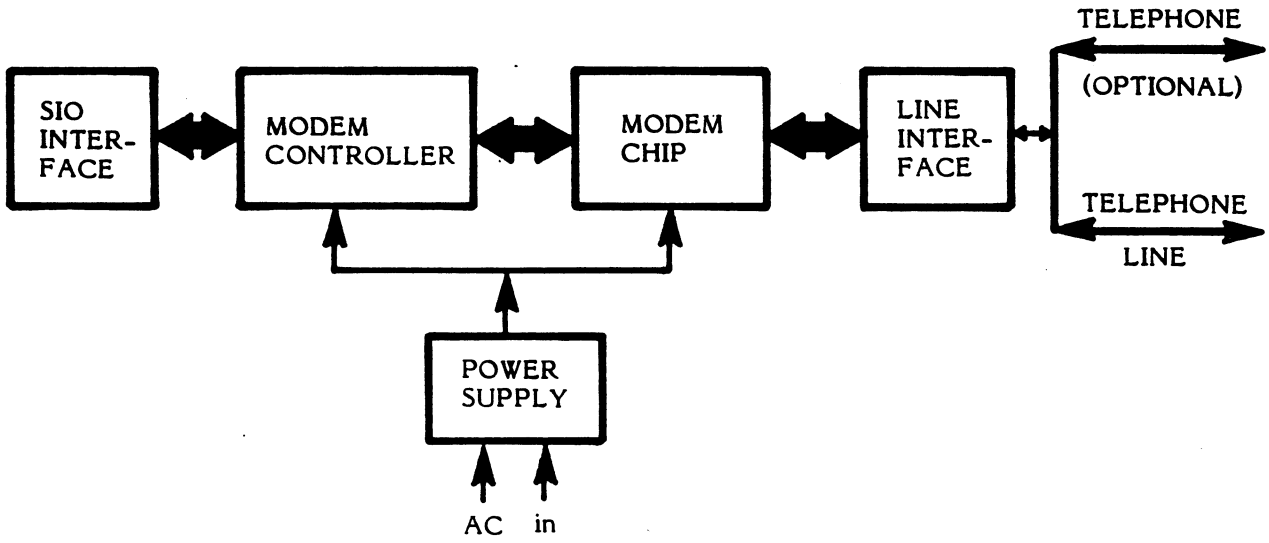

Figure 1-1. 835 Direct Connect Modem Block Diagram

SERIAL I/O INTERFACE

This circuit consists of the two 13-pin SIO Connectors (J2 and J3) and the LM339 Comparator (M6).

- Pins 3, 9, and 13 are inputs to the computer straight from the 835 Controller (M5).
- Pins 2, 5, 7, and 10 are outputs from the computer. The signals coming in on these pins go through the Comparator (M6), which acts as a latch, before reaching the 835 Controller (M5).

835 CONTROLLER CHIP

The 835 Controller chip is an Intel 8048 Microprocessor with Atari-designed firmware. The Controller performs the following functions:

- Translates the computer commands
- Sends data and status to the computer
- Receives data from the computer
- Sends data and commands to the Modem Chip
- Receives data and status from the Modem Chip

The 835 Controller (M5) communicates with the computer using the normal SIO Protocol at a rate of 300 Baud. It communicates with the Modem Chip using a modified RS-232C Protocol at a rate of 300 Baud.

FUNCTIONS OF THE CONTROLLER CHIP

On Hook/Off Hook

Upon receipt of either command from the computer, the Controller sends a signal out on Pin 24 causing the Relay (K1) to change state. The signal connects (Off-Hook) or disconnects (On-Hook) the 835 with the telephone line. The default condition is On-Hook.

Dial Digit

Upon receipt of this command from the computer, the Controller toggles the line Relay (K1) via Pin 24 to accomplish Pulse Dialing. The timing for this operation conforms to FCC and TAP (Canadian) specifications.

Originate/Answer Mode

Upon receipt of this command from the computer, the Controller sets Pin 37 HIGH (Originate) or LOW (Answer). This causes the Modem Chip (M4) to change to the correct transmit and receive frequencies. The default condition is Originate.

Send Data

Upon receipt of this command from the computer, followed by a single, asynchronous character on Pins 27 and 39, the Controller sends the same single asynchronous character to the Modem Chip (M4) on Pin 38.

Receive Data

Upon receipt of this command, the Controller sends a single character to the Computer on Pin 21, if a character is available. The Controller receives characters from the Modem Chip (M4) on Pins 1 and 34.

Present Status

Upon receipt of this command, the Controller sends Status information to the computer on Pin 21.

Analog Loopback

Upon receipt of this command, the Controller sets the Modem Chip (M4) to the Analog Loopback mode by pulling Pin 23 HIGH. This, in effect, disconnects the telephone line from the Modem Chip (M4), allowing the Modem Chip (M4) to be tested for correct functioning.

Audio Off/On

Upon receipt of this command, the Controller sends a signal out Pin 35, controlling Audio Monitoring of the telephone line.

Other Functions

- Setting the Baud Rate of the Modem Chip (M4) to 300 Baud on Pin 36
- Monitoring the Carrier Detect line from the Modem Chip (M4) on Pin 33
- Turning the Carrier Detect LED on with Pin 22 when Pin 33 goes Low
- Running a test on itself and the Modem Chip at power-up

MODEM CHIP

The Modem Chip is a Texas Instruments 99532 IC which uses Frequency Shift Keying to transmit and receive serial binary data over the telephone line.

The Modem Chip takes the digital signals from the 835 Controller (M5) and converts them to Analog signals for the telephone line and vice versa. In addition, the Modem Chip detects the presence of a carrier wave on the telephone line and passes this information on to the 835 Controller (M5).

Transmit

- 300 Baud character formatted data is placed on Pin 10 by the 835 Controller (M5).
- A LOW on Pin 13 sets the Transmitter for Bell 103 type output.
- Pin 12 receives a HIGH (Originate) or LOW (Answer) signal from the 835 Controller (M5) to set the Transmit and Receive frequencies.
  - In the Originate mode the transmitter issues a sinewave tone on Pin 16 at 1270Hz when Pin 10 is HIGH, and a 1070Hz tone when Pin 10 is LOW.
  - In the Answer mode the transmitter issues a sinewave tone of 2225Hz on Pin 16 when Pin 10 is HIGH, and a Tone of 2025Hz when Pin 10 is LOW.

Receive

When the Modem Chip detects a Carrier signal on Pin 15, it pulls Pin 2 LOW. This alerts the 835 Controller (M5) that a Carrier has been detected. Pin 2 stays LOW until Disconnect occurs.

- Turn-On and Turn-Off timing of the Carrier Detect is provided by the circuit connected to Pin 3 of the Modem Chip.
- In the Originate mode, when Pin 15 of the Modem Chip receives a 2025Hz, sinewave tone, Pin 4 goes LOW. A 2225Hz, sinewave tone sets Pin 4 HIGH.
- In the Answer mode a 1070Hz signal on Pin 15 sets Pin 4 LOW, and a 1270Hz, signal sets Pin 4 HIGH.

Analog Loopback

A HIGH on Pin 1 of the Modem Chip effectively disconnects it from the Line Interface. In addition it connects the transmitter and receiver portions of the chip together, allowing transmitted data to be "looped back" to the computer. This "loop back" tests the internal analog and digital circuits of the Modem Chip.

LINE INTERFACE

A description of the Line Interface functions follows.

- OFF/ON HOOK signals and PULSE DIALING signals are sent from Pin 24 of the 835 Controller (M5) through the Multiplexor (M3) to the Relay (K1).

- TRANSMIT signals are sent from Pin 16 of the Modem Chip (M4) to Pin 2 f the Op-Amp (M2) for amplification. Then from Pin 1 of (M2) to the Transformer (T1) and on to the telephone line, if Relay (K1) is closed.

- RECEIVE signals come from the telephone line across the Transformer (T1) and into Pin 5 of Op-Amp (M2). In M2 they are separated from the local Transmit signals and sent on to Pin 15 of the Modem Chip (M4). These Receive signals are also applied to Pin 2 of the Multiplexor (M3).

- When the 835 Controller (M5) sends a signal out Pin 35 to Pin 10 of the Multiplexor (M3), the Audio signals from the telephone line (e.g., dialtone, or someone talking) are sent to the computer. They are heard on the TV Speaker.

POWER SUPPLY

The Power Supply receives 22 VAC from the external Power Adaptor and converts it to the following DC voltages.

- +V (≅18v) Used for the Hook Relay and Carrier LED Drive Circuits
- +12V Used by the Modem Chip (M4)
- +5V Used throughout the PC Board
- -5V Used for the Hook Relay Drive Circuit and the Modem Chip (M4)

SECTION TWO

SILKSCREEN AND SCHEMATIC

An oversized silkscreen and schematic are stapled to the front cover of the manual.

SECTION THREE

TEST PROCEDURES

IMPORTANT: In order to test the unit completely, the customer must return the 835 DCM, the 835 power adaptor, and the Telelink II Cartridge to the service center.

EQUIPMENT REQUIRED

- Standard Tool Kit
- Oscilloscope
- Chip Remover
- ATARI 800™ Computer
- ATARI 835 Test Diskette
- ATARI 810™ Disk Drive
- BASIC Cartridge
- Digital Voltmeter (optional)

WARNING: Do not hook the 835 DCM to Bell Telephone's "Horizon System". Doing so damages the telephone system. "Horizon" is a 4-wire, non-standard configuration that accepts only touch-tone pulsing.

POWER-UP SEQUENCE

Power up the 810 Disk Drive and insert the test diskette.

Insert the BASIC cartridge in the computer. Leave the computer off.

Connect the 835 DCM and power it up. The Power LED should light and stay lit. The On-Line LED should flash once and stay off. The Relay (K1) should click once. If this series of events does not occur, go to the Troubleshooting Flowchart, Section 4, page 4-2.

Turn on the computer to boot the test diskette. This automatically loads the device handler required for the 835 DCM.

TEST SEQUENCE

When **READY** appears on the screen, type **RUN"D1:TEST835"** and press RETURN. This loads and runs the program used for testing the 835 DCM.

When the title appears on the screen, type any key on the computer and the Option Menu appears.

The following procedure tests all functions of the 835 DCM. If you prefer to follow these procedures in flowchart format, turn to the page referenced at the start of each sequence. If a function does not operate properly, you must turn to the flowchart to locate the repair procedures.

Operation	Explanation
TOGGLE TV SOUND ON TEST	**Flowchart Entry Page 4-6.**
Press key 2.	This key toggles the TV sound ON.
Press key 1.	This key toggles the direction to ANSWER. You should hear a high-pitched tone coming from the TV speaker.
Press key 1, again.	This toggles the direction to Originate. You should hear a low-pitched tone.
Press key 2.	This toggles the TV sound OFF.
TELEPHONE OFF-HOOK TEST	**Flowchart Entry, Page 4-5.**
Press key 3.	This key toggles the telephone OFF-HOOK. You should hear the Relay click. The right-hand column of the Option Menu read: OFF.
Press key 3, again.	This toggles the telephone ON-HOOK. You should hear the Relay click. The right-hand column of the Option Menu reads: ON.
Press key 9.	This key toggles the telephone OFF-HOOK (the Relay clicks on) and sets the Carrier Detect circuit in operation. A WAITING FOR CARRIER MESSAGE appears on the screen. It should remain for 30 seconds, at which time the Relay should click off and the Option Menu should return to the screen.
AUTODIAL TEST	**Flowchart Entry, page 4-8.**
Press key 7.	When you press key 7, a warning message about "Horizon" phone systems appears, along with a request for the local telephone number of TIME. If the modem is not hooked up to a telephone line, ignore this request and press RETURN. Key 7 tests the Autodial function of the 835. A menu entitled AUTODIAL OPTION appears on the screen with three options. Option #1 is for testing the modem without being connected to a telephone line. Options #2 and #3 can also be used for testing the 835, but only if you have a telephone line connected to it.

Operation	Explanation
	If you Press key 1, the Relay should click on. After a three second wait (waiting for Dialtone), the Relay starts pulsing as the digits are dialed. The Relay starts with short pulses for the one and then sends pulses progressively longer, with 0 being the longest. After 30 seconds (waiting for carrier), the Menu returns to the screen.
ANALOG LOOPBACK TEST Press key 8.	**Flowchart entry, page 4-13.** This key starts the Analog Loopback Test, which tests the internal circuitry of the Modem IC (M4). The following sequence of events should occur: • The screen turns gray and displays **CARRIER (ACQUIRED).** • The On-Line LED on the 835 lights up. • The data sent from the computer to the 835 and the data sent from the 835 to the computer displays on the screen. This data should be identical.

The above procedure completes the testing of the 835 DCM.

Be sure the Telelink II™ cartridge works correctly, according to the Operator's Manual. If not, replace it. Be sure the customer uses Telelink II exactly as the Operator's Manual instructs.

SECTION FOUR

DIAGNOSTIC FLOWCHART

The Diagnostic Flowchart for the 835 DCM is designed to be easy to use and the primary aid when troubleshooting the 835. When a line terminates with a letter inside a circle, locate the page that begins with that letter in a circle and continue the diagnosis. The flowcharts are arranged in alphabetical order.

Should a problem persist despite your having followed all of the prescribed repair procedures, call the ATARI Techline Specialist:

Inside California (800) 672-1466
Outside California (800) 538-1535

835 MODEM DIAGNOSTIC FLOWCHART

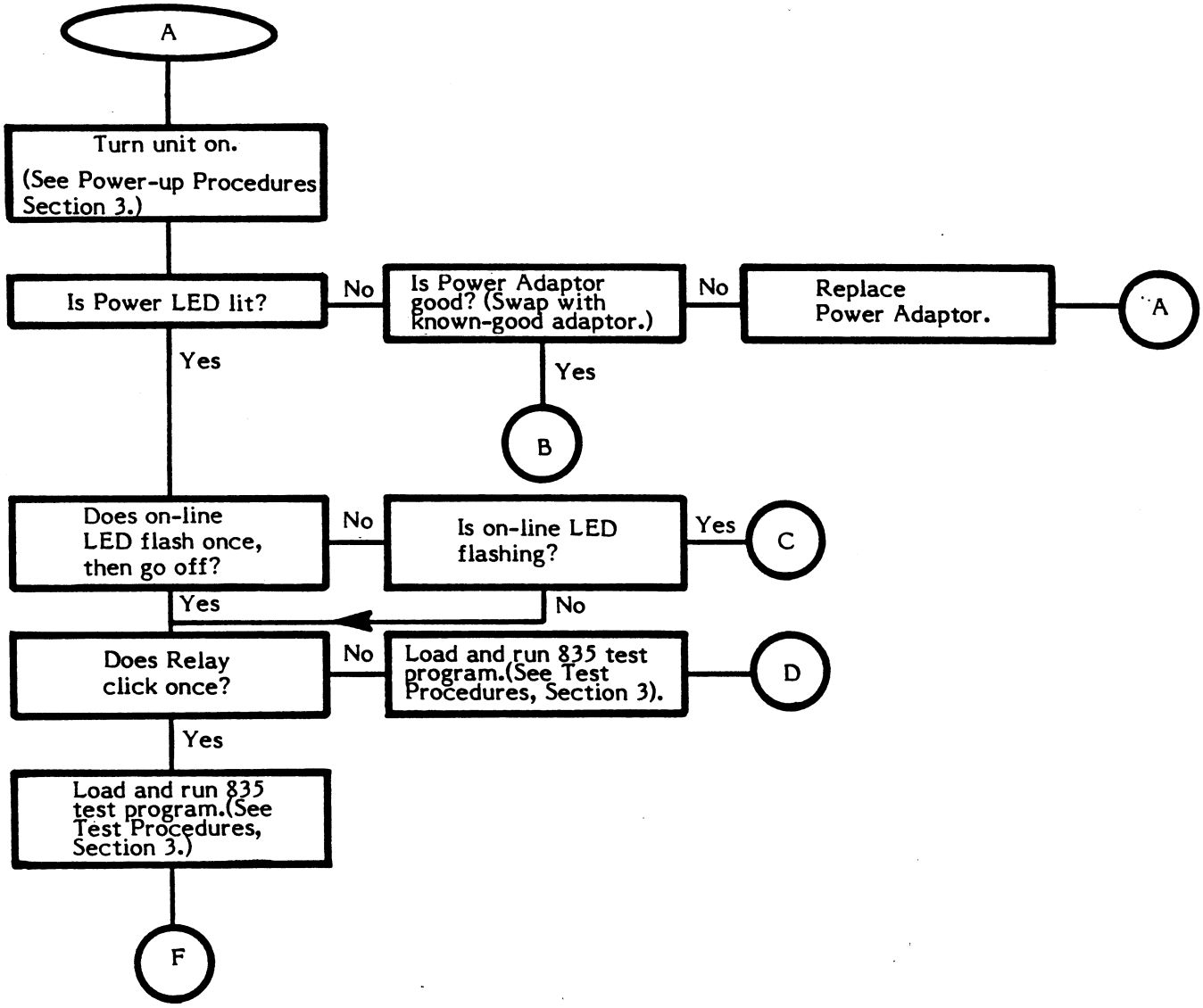

POWER LED FAILURE

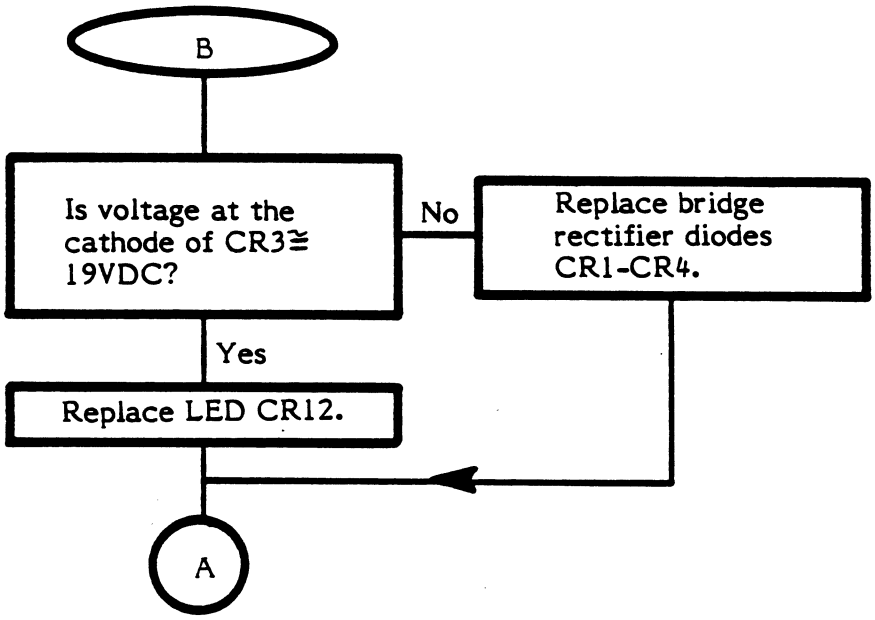

SELF TEST

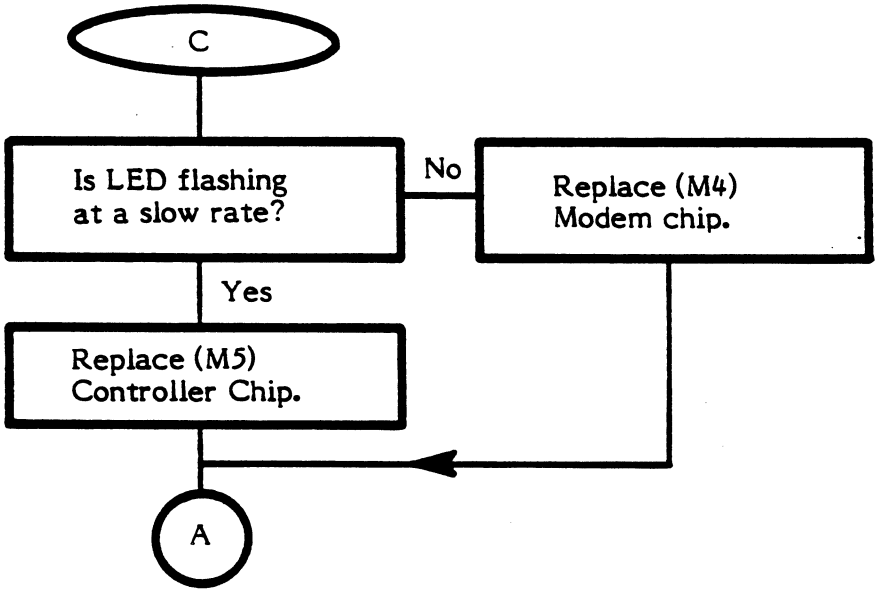
C
Is LED flashing at a slow rate?
No
Replace (M4) Modem chip.
Yes
Replace (M5) Controller Chip.
A

TELEPHONE OFF-HOOK TEST

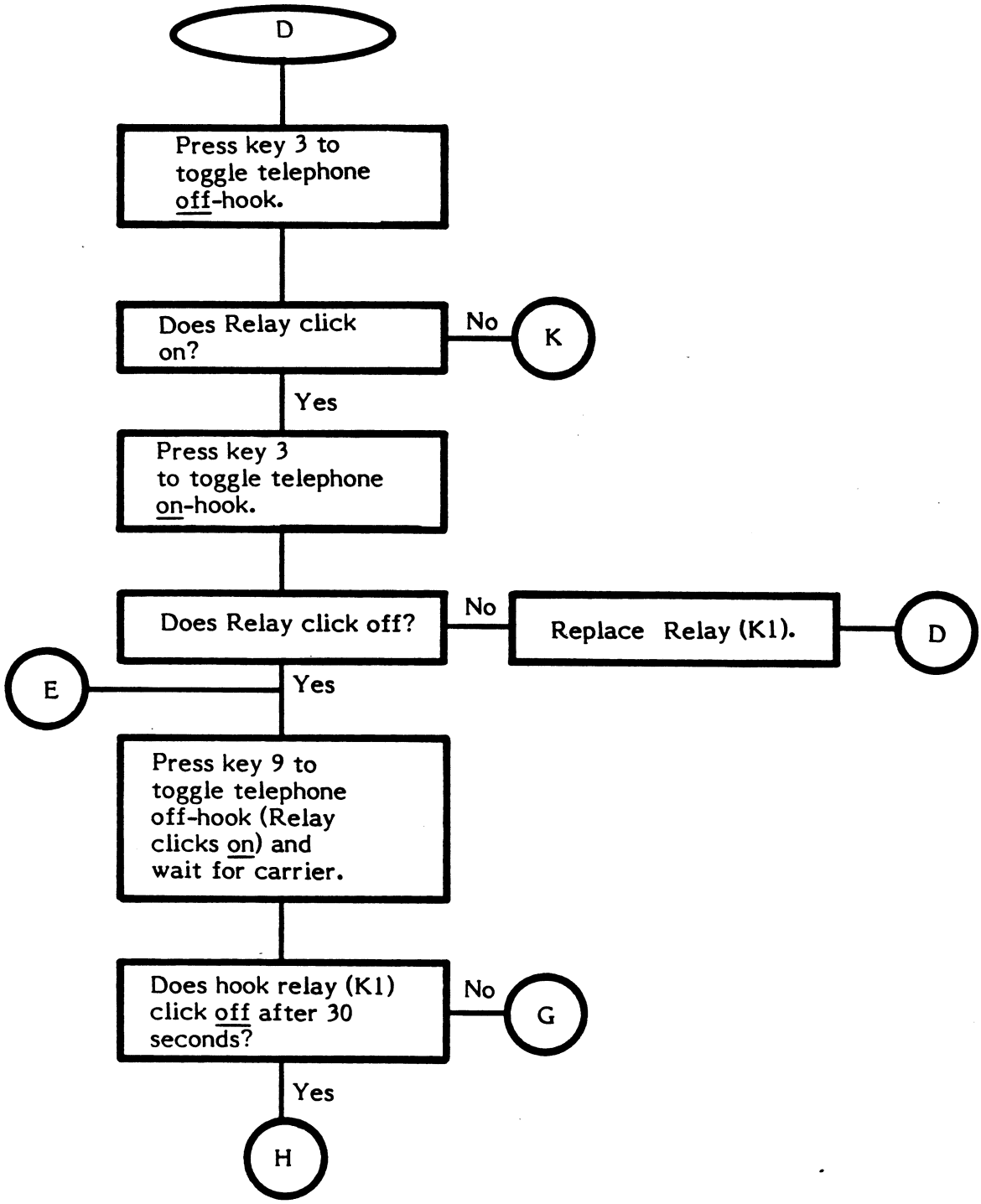

TOGGLE TV SOUND ON TEST

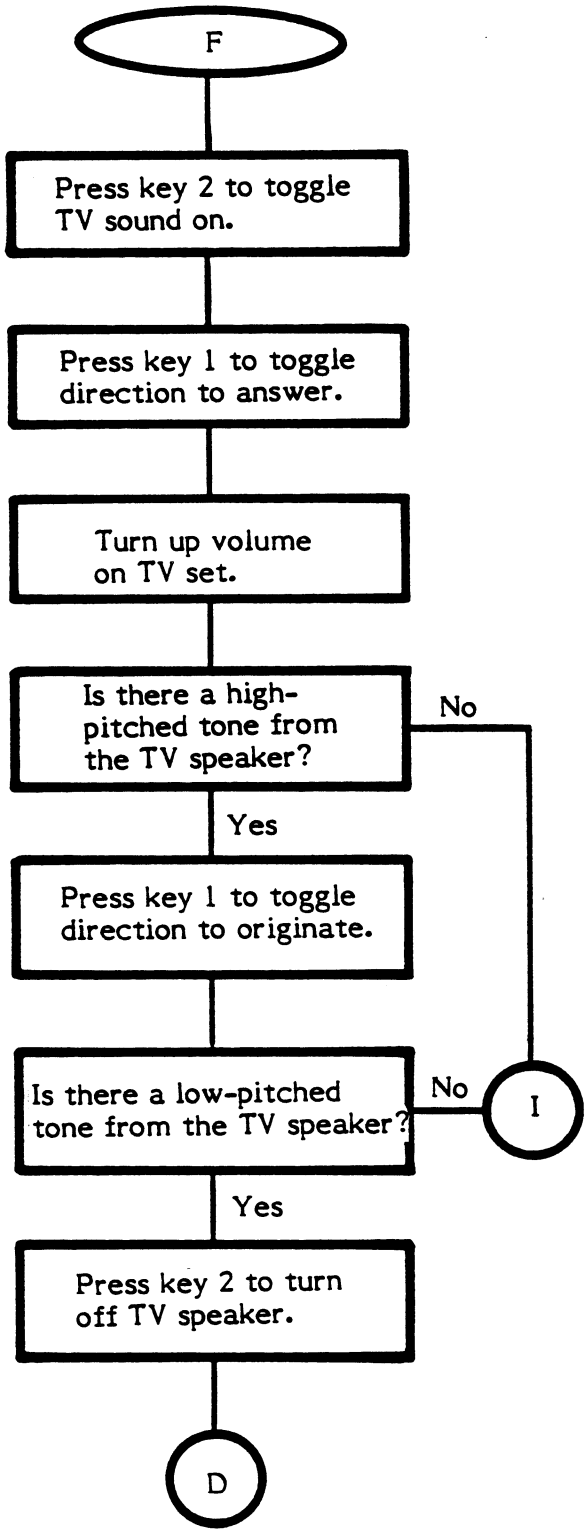

HOOK RELAY FAILURE TEST

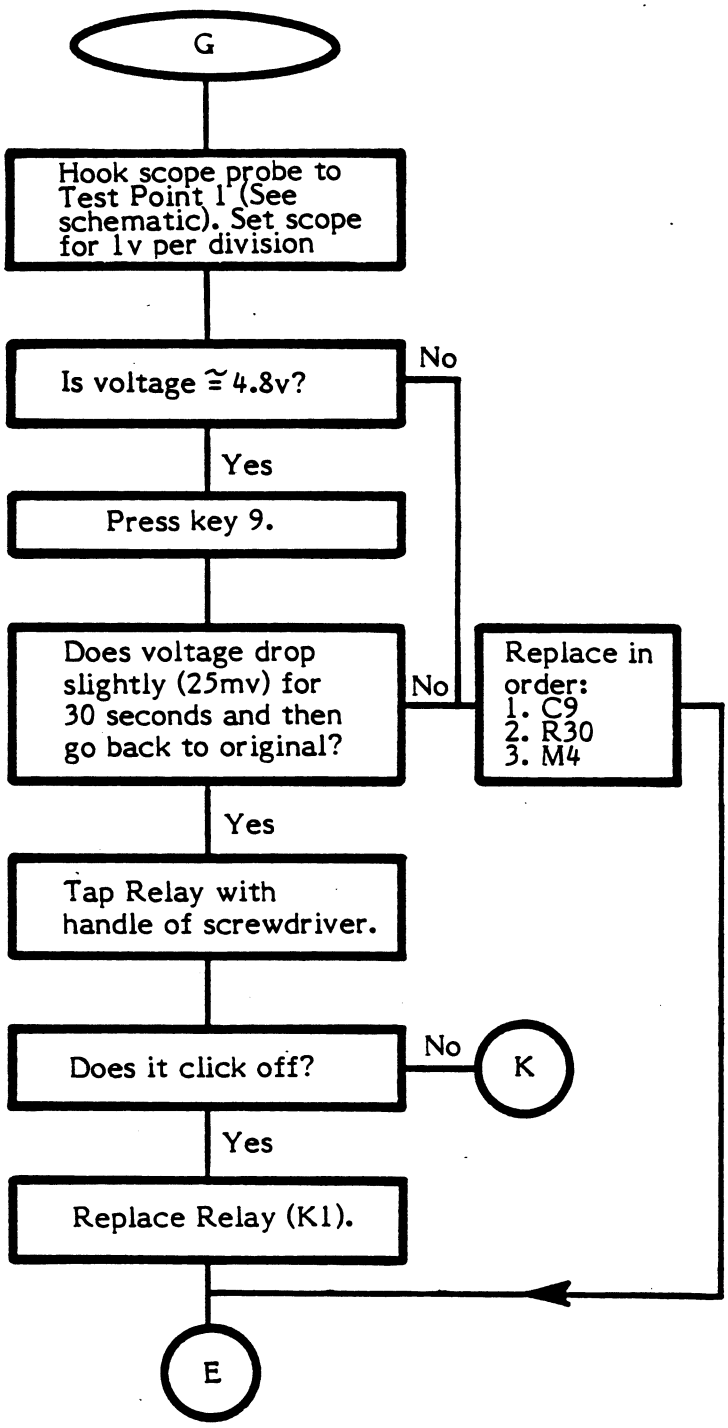

AUTODIAL TEST

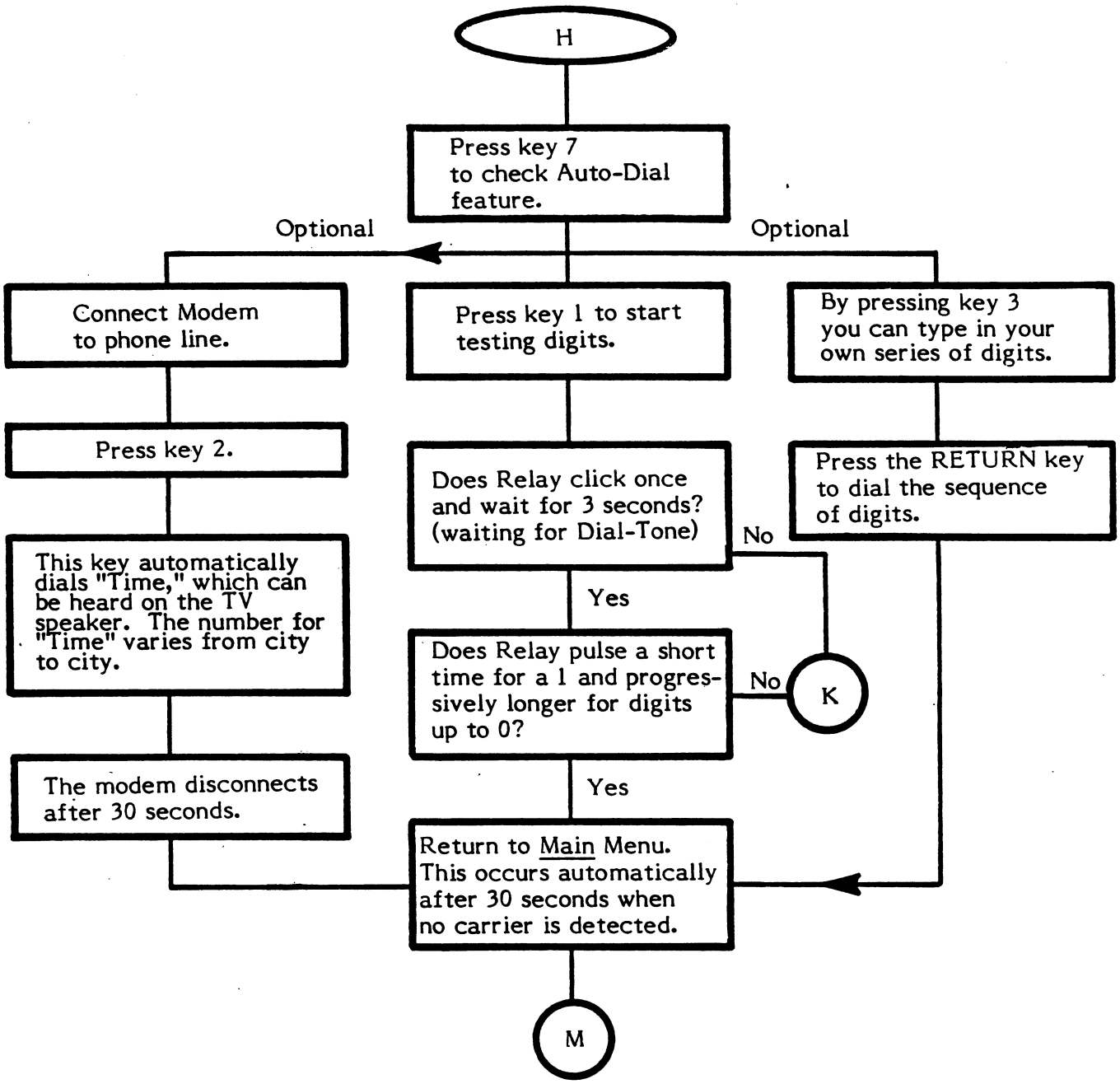

AUDIO LINE OR TRANSMIT FAILURE

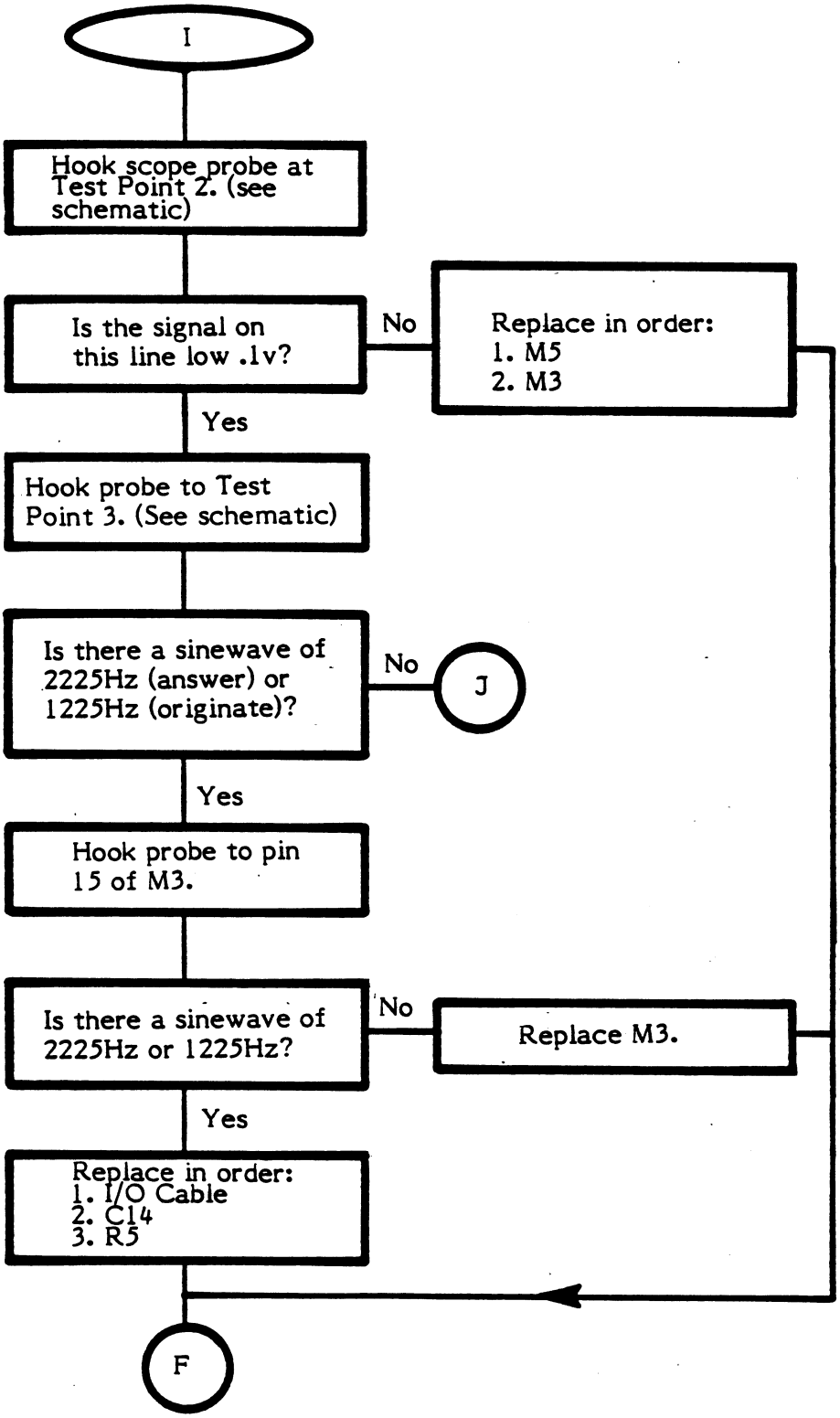

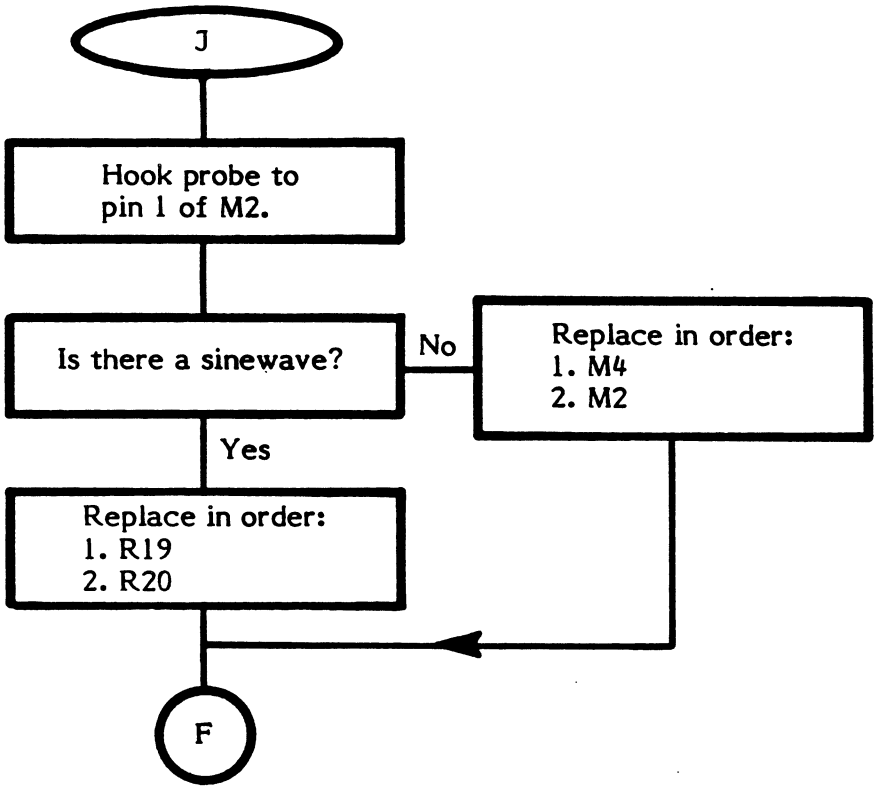
J
Hook probe to pin 1 of M2.
Is there a sinewave?
No
Replace in order:
1. M4
2. M2
Yes
Replace in order:
1. R19
2. R20
F

AUTODIAL FAILURE

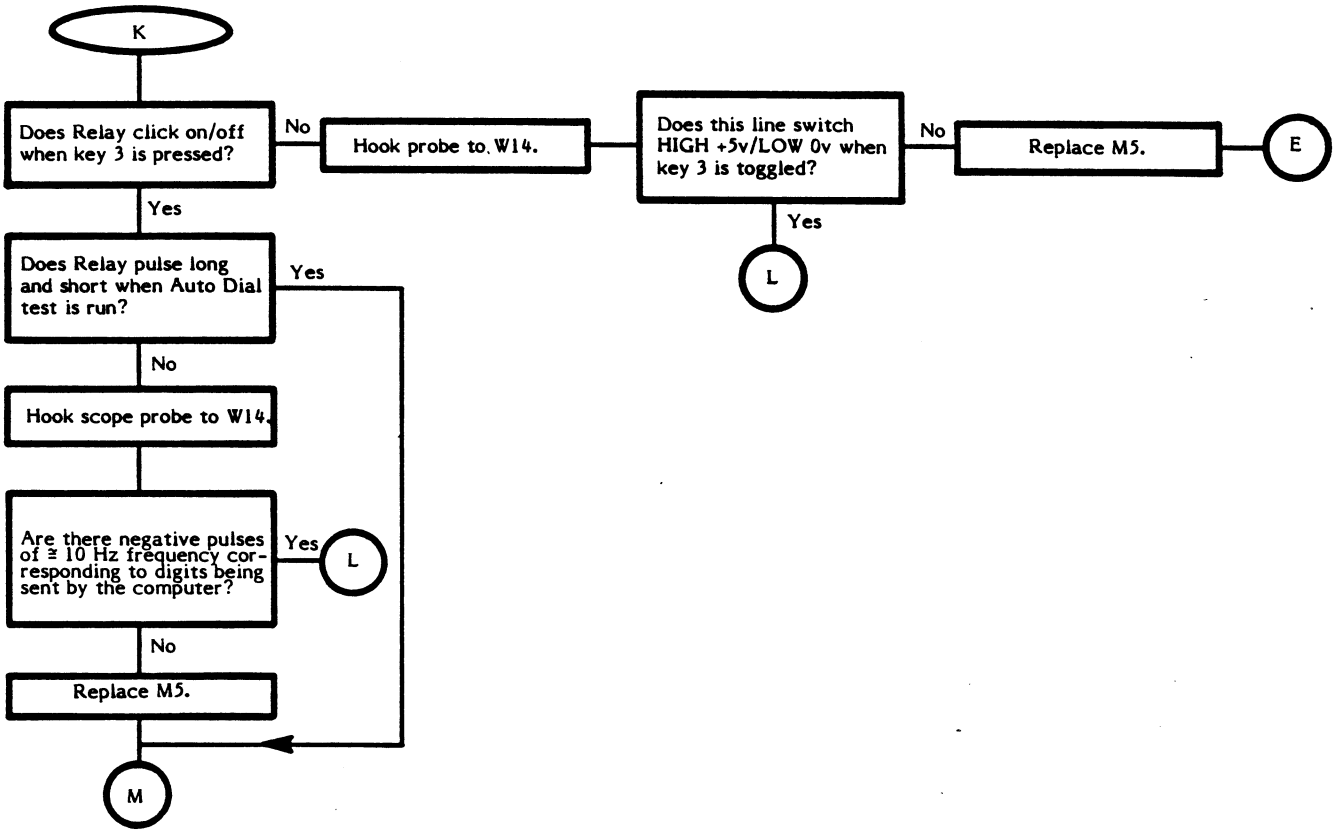

AUTODIAL FAILURE (continued)

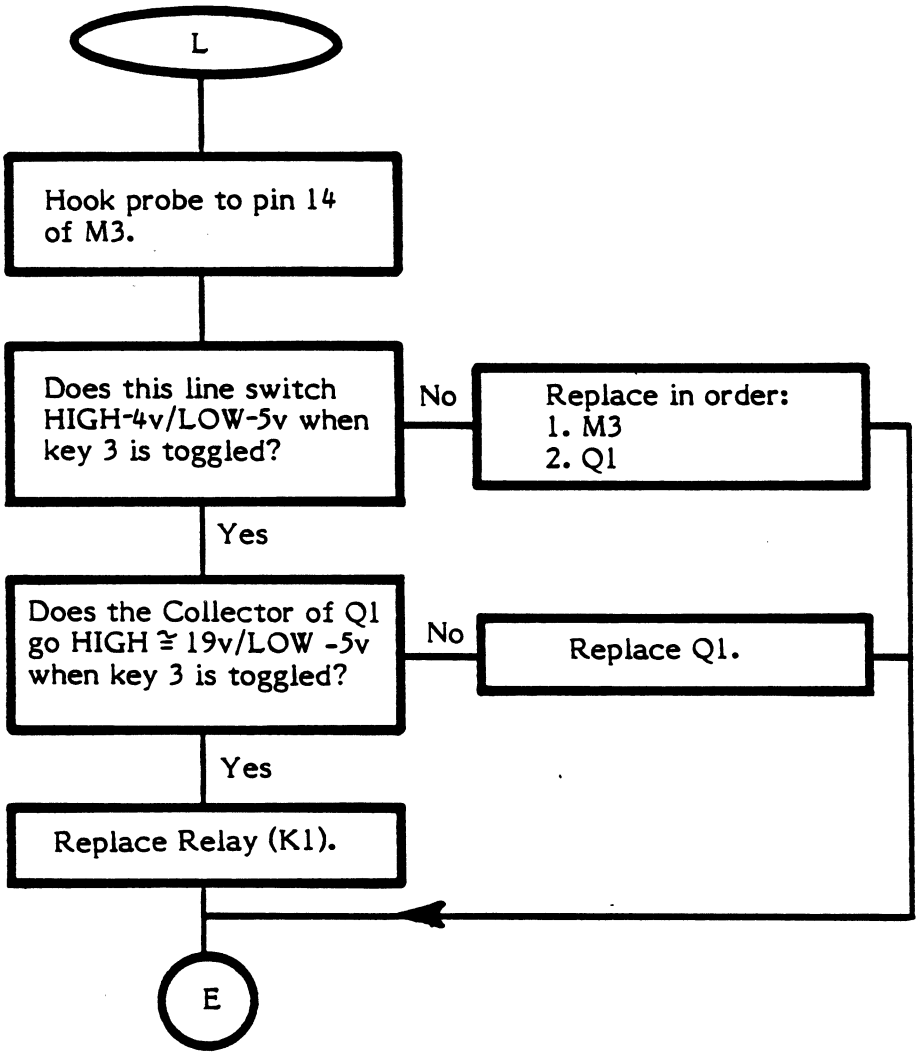

ANALOG LOOP-BACK TEST

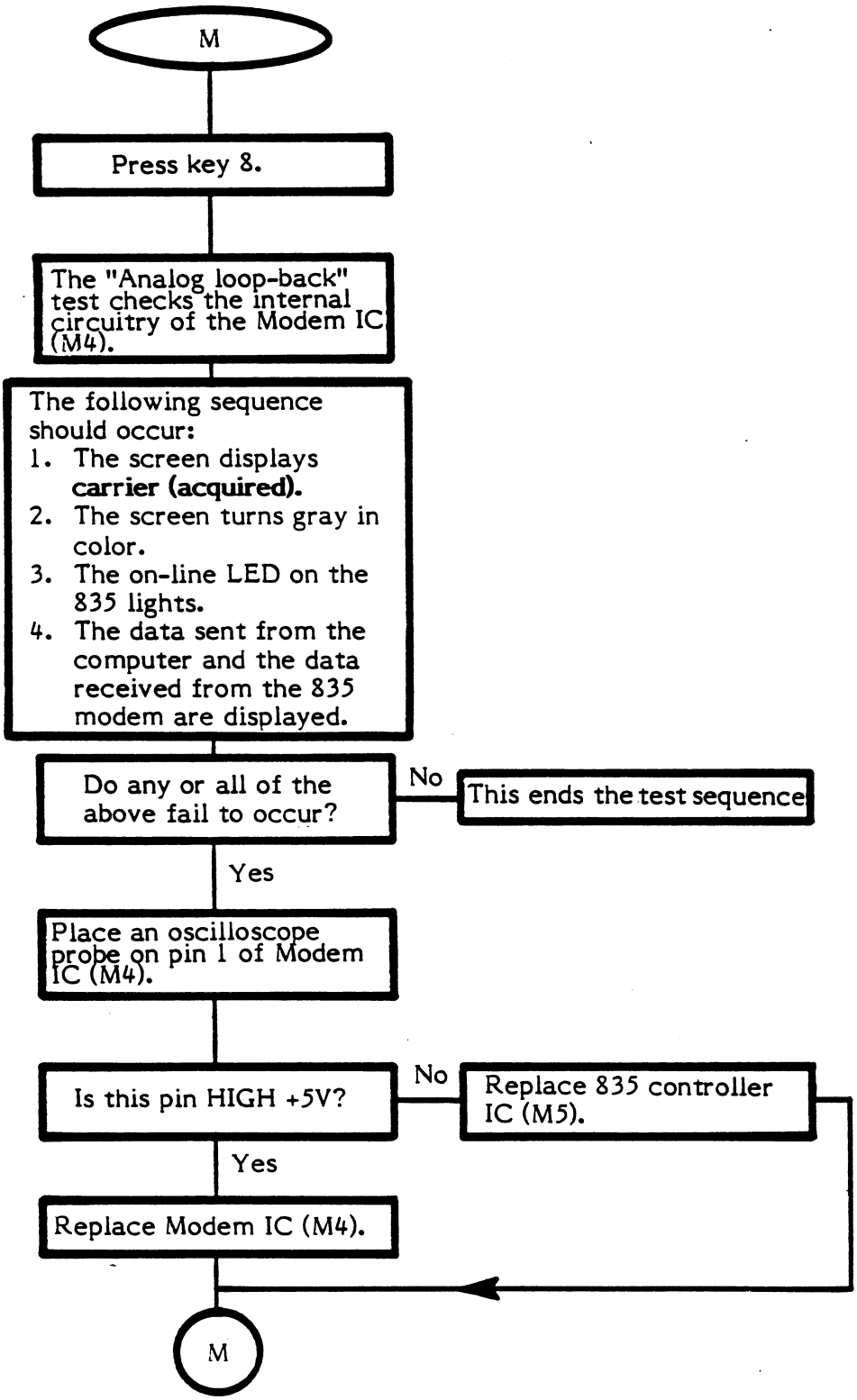

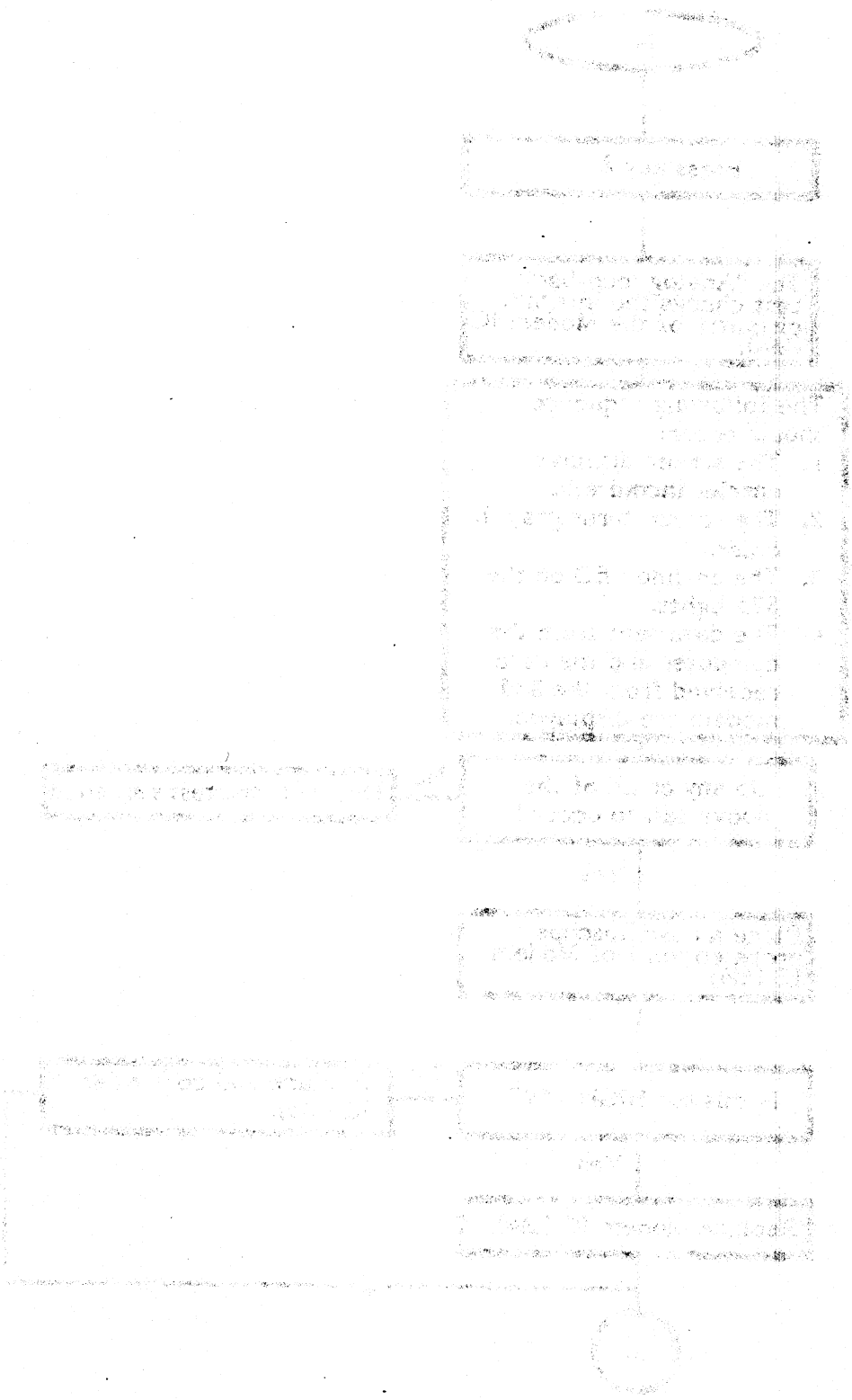

SECTION FIVE

PARTS LIST

PART NUMBER	DESCRIPTION	LOCATION
C015970-02	Top Housing	
C015971-03	Bottom Housing	
C060549	MPU 8048	M5
C060557	FCC Phone Cord	
C060558	TAP (Canadian) Phone Cord	
CA012957-16	Telelink II Cartridge	
CA060535	Power Adaptor	
FC100276	1N4733 Zener 5V	CR5,CR6,CR7,CR10
FC100277	1N4742 Zener 12V	CR9
FC100278	4558 Dual Op-Amp	M2
FC100279	Modem IC TI99532	M4
FC100280	4053 MUX/DEMUX	M3
FC100281	LM339 Comparator	M6
FC100282	Crystal 4.032 MHz	Y1
FC100283	Transformer, 600 Ohm	T1
FC100284	Relay	K1
FC100285	Power Plug Connector	J1
FC100286	RJ11C Phone Jack	J4,J5
FC100287	Socket, 18-pin IC	M4

SECTION SIX

SERVICE BULLETINS

This section is to be used by you to file the three classifications of service bulletins that are periodically released by the Director of Technical Support.

The following are brief descriptions of each classification:

FIELD CHANGE ORDER

A Field Change Order describes mandatory hardware or software changes to ATARI Computer products and instructs how to implement these changes. The changes must be performed on all units serviced or repaired.

UPGRADE BULLETIN

An Upgrade Bulletin describes product improvements or modifications that the consumer may wish to purchase. These bulletins allow you to modify the customer's unit to add capabilities which may not have been available when the unit was originally manufactured.

TECH TIP

A Tech Tip is a document of a general nature which transmits routine service or repair information. By communicating methods developed since you attended training classes, Tech Tips aid to continuously improve repair skills and increase knowledge of ATARI Computer Products.

Other times, Tech Tips alert you to units that have been modified and are now standard for ATARI Manufacturing, but are different from many existing units and require different repair techniques.

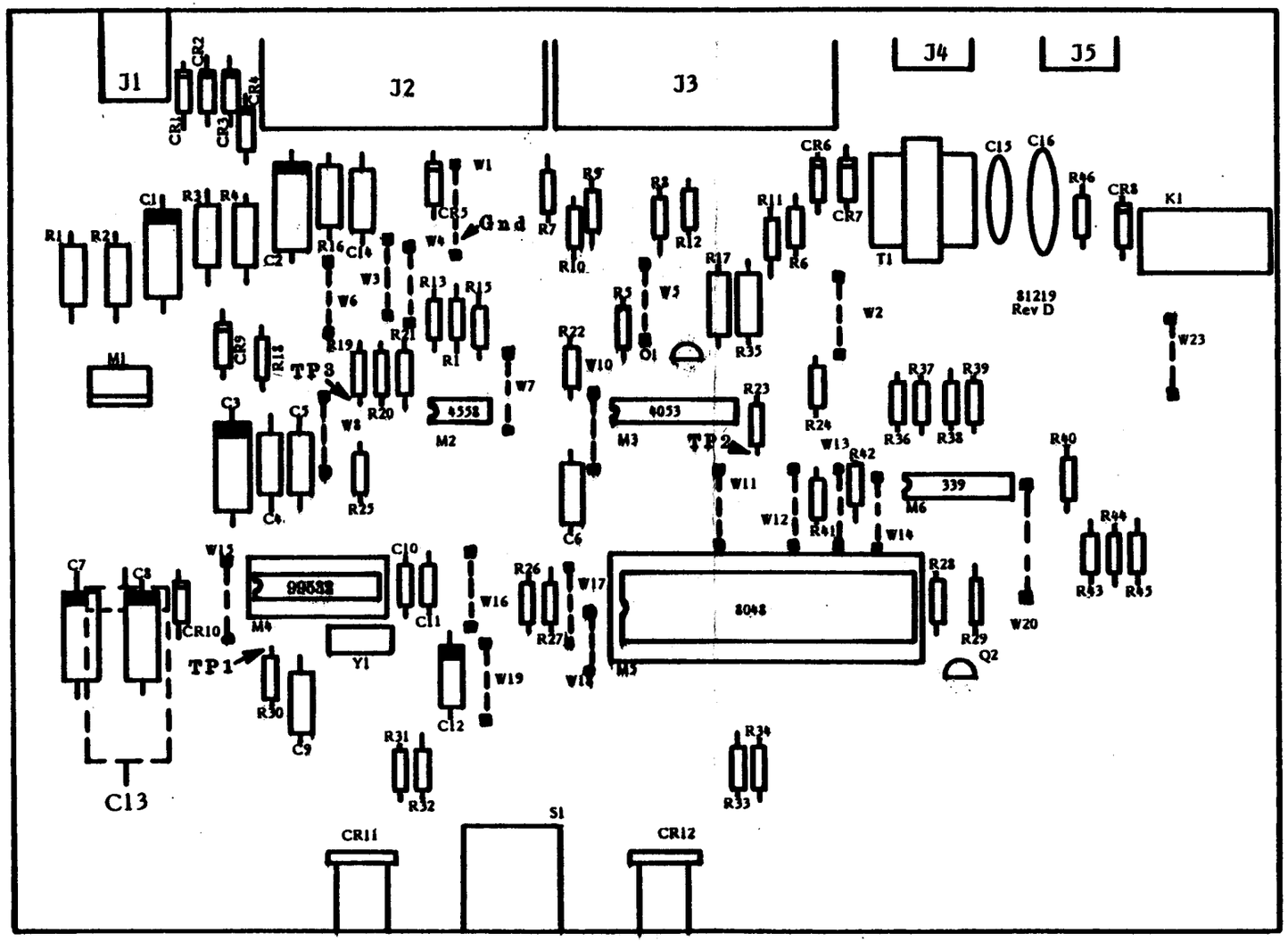

835 Direct Connect Modem Silkscreen
Page 1

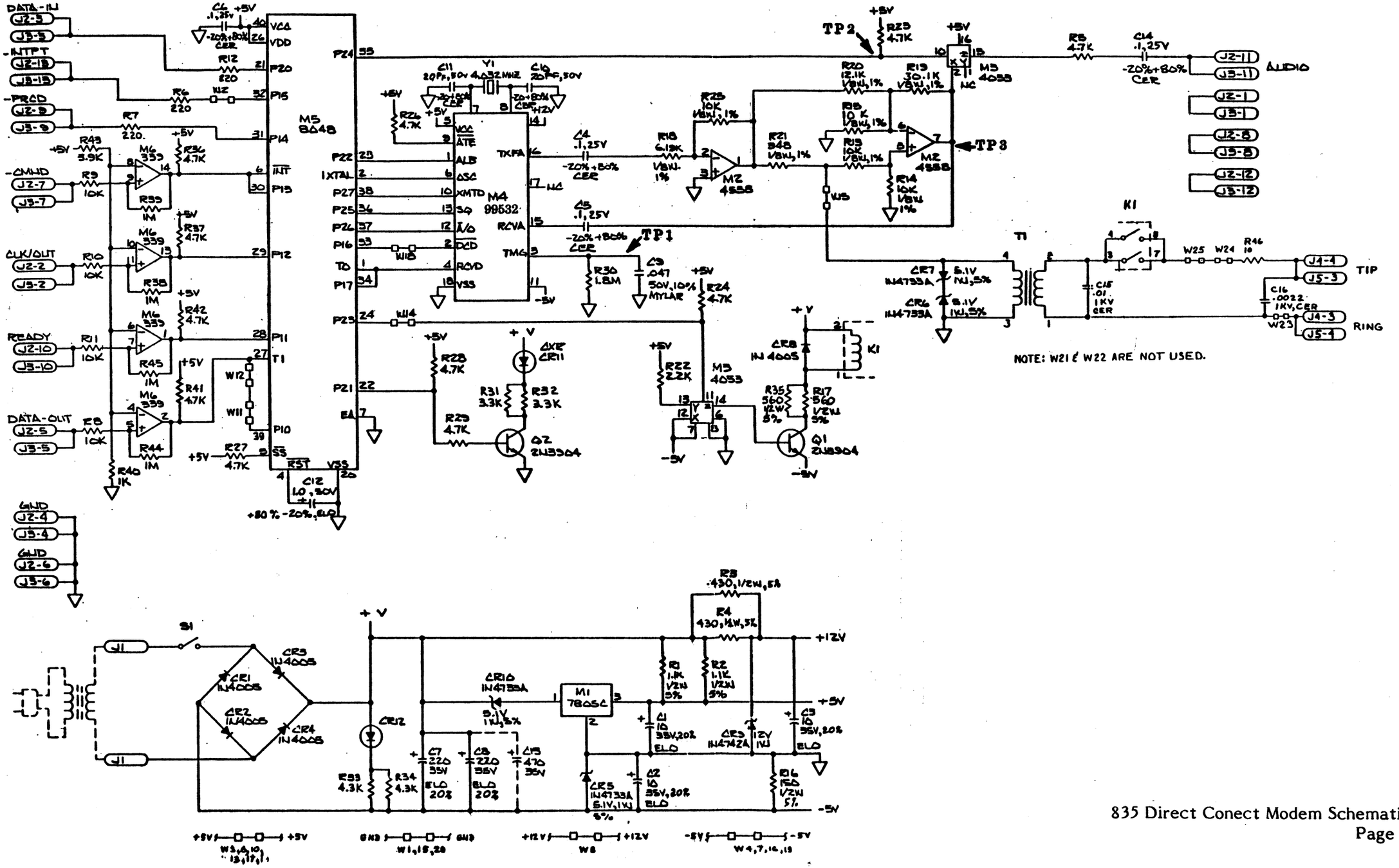

835 Direct Conect Modem Schematic
Page 2

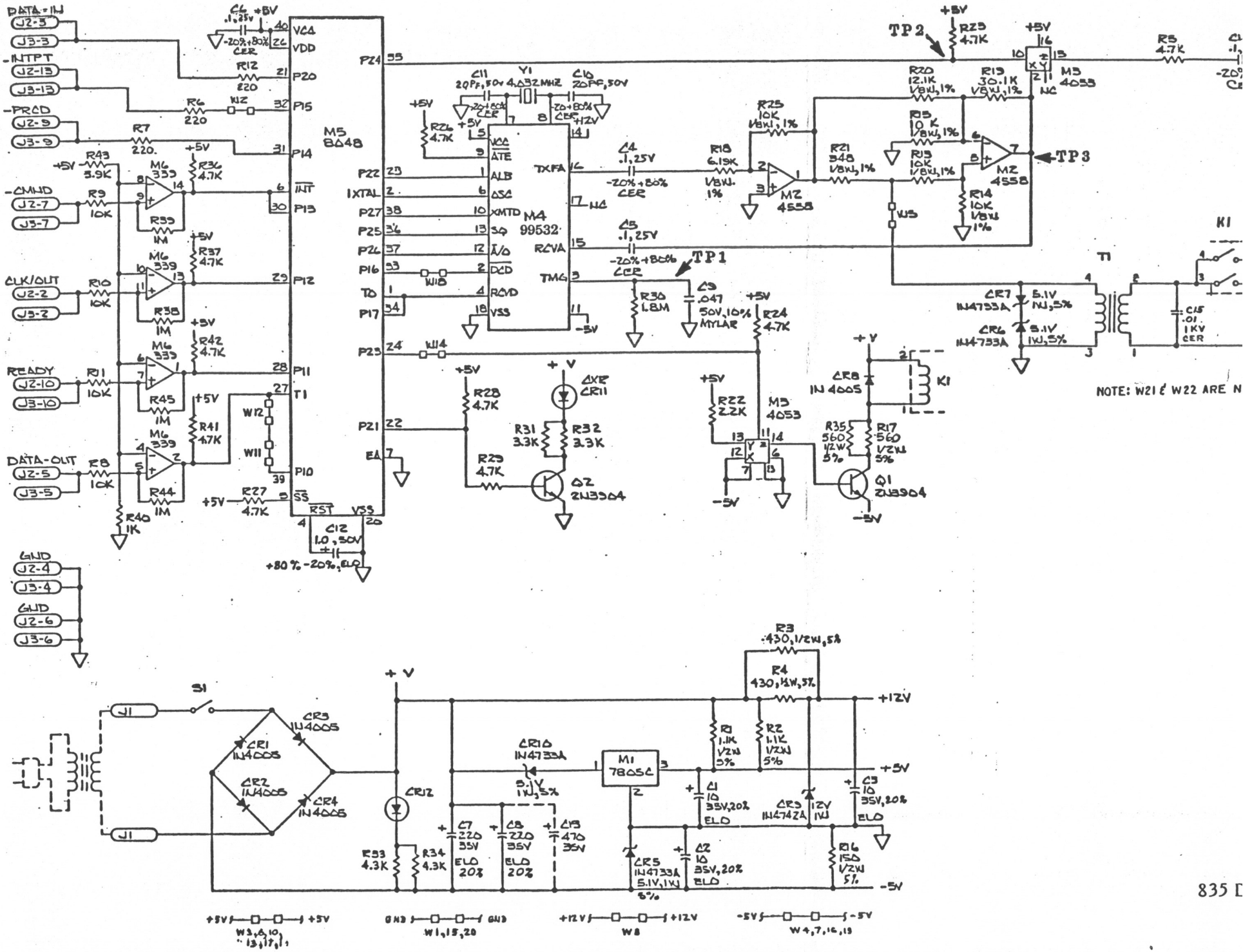
DATA-IN
J2-3
J3-3
-INTPT
J2-13
J3-13
-PRCD
J2-9
J3-9
-CMND
J2-7
J3-7
CLK/OUT
J2-2
J3-2
READY
J2-10
J3-10
DATA-OUT
J2-5
J3-5
GND
J2-4
J3-4
GND
J2-6
J3-6
M5
8048
M4
99532
M3
4053
M2
4558
M6
339
TP1
TP2
TP3
K1
T1
Q1
2N3904
Q2
2N3904
CR8
1N4005
CR7
1N4733A
CR6
1N4733A
CR11
CR10
1N4733A
CR12
CR3
1N4005
CR1
1N4005
CR2
1N4005
CR4
1N4005
CR5
1N4733A
CR9
1N4742A
M1
7805C
S1
J1
+12V
+5V
-5V
NOTE: W21 & W22 ARE N
835 D

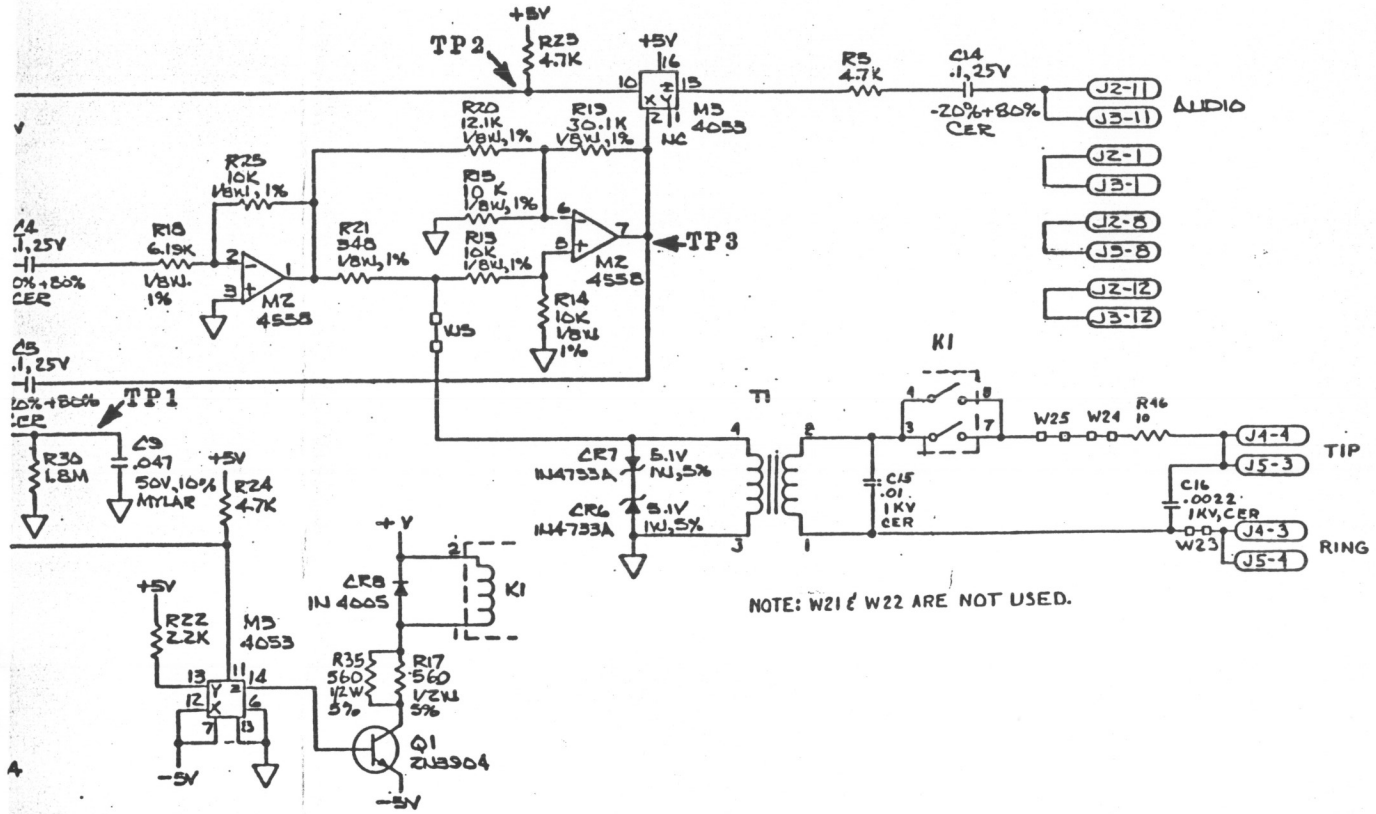
TP2
+5V
RZ3 4.7K
R5 4.7K
C14 .1,25V
-20%+80% CER
J2-11
J3-11
AUDIO
R20 12.1K 1%BW,1%
R19 30.1K 1%BW,1%
M3 4053
NC
R25 10K 1%BW,1%
R15 10K 1%BW,1%
R18 6.19K 1%BW, 1%
R21 348 1%BW,1%
R13 10K 1%BW,1%
M2 4558
TP3
R14 10K 1%BW 1%
W5
J2-1
J3-1
J2-8
J3-8
J2-12
J3-12
K1
T1
TP1
C9 .047 50V,10% MYLAR
R30 1.8M
R24 4.7K
CR7 IN4733A 5.1V 1W,5%
CR6 IN4733A 5.1V 1W,5%
C15 .01 1KV CER
W25 W24 R46 10
J1-1
J5-3
TIP
C16 .0022 1KV,CER
W23
J4-3
J5-1
RING
NOTE: W21 & W22 ARE NOT USED.
+V
CR8 IN4005
RZ2 2.2K
M3 4053
R35 560 1/2W 5%
R17 560 1/2W 5%
Q1 2N3904
-5V

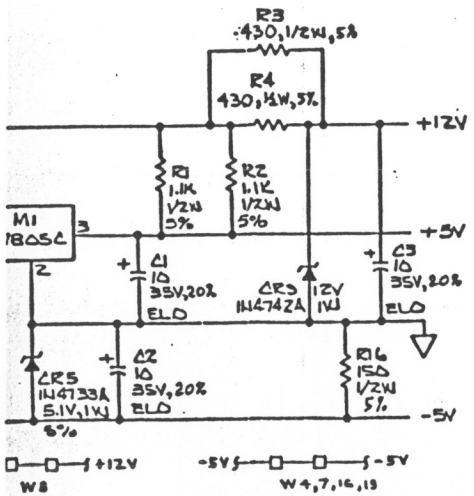
R3 .430,1/2W,5%
R4 430,1/2W,5%
+12V
R1 1.1K 1/2W 5%
R2 1.1K 1/2W 5%
M1 1805C
+5V
C1 10 35V,20% ELO
CR3 IN4742A 12V 1W
C3 10 35V,20% ELO
CR5 IN4733A 5.1V,1W 5%
C2 10 35V,20% ELO
R16 150 1/2W 5%
-5V
W8
W4,7,16,13